Installation Instructions

Mounting iC6 In-Ceiling Loudspeaker

iC6, iC6T

Ceiling Speaker

Suspended Ceiling Types:

All iC6 loudspeakers are supplied with support rails designed to fit 24in or 600mm standard ceiling tiles.

Use the following procedure:

Non-Suspended Ceiling Types:

Use the iC6-NCB New Construction Bracket (provided separately) to create a secure mounting fixture above a non-structural ceiling material such as drywall.

Begin the procedure at step 4, inserting the speaker into the pre-installed mounting ring of the NCB.

1.

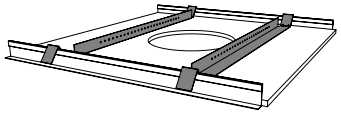

Lay the support rails across the ceiling tile mounting system

2.

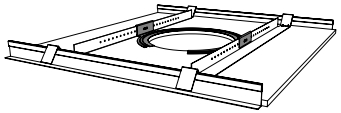

Place the C Ring in between the support rails as as shown

3.

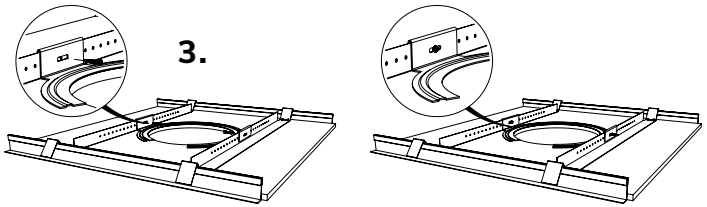

Align the C Ring with the hole cut in the tile and secure

4.

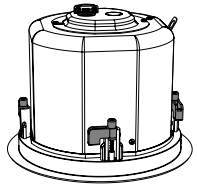

Ensure the locking tabs are in the open position before mounting the loudspeaker

5.

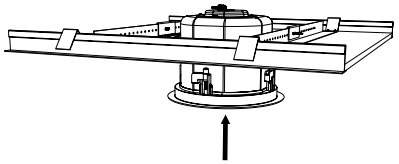

Insert the speaker into the mounting ring

6.

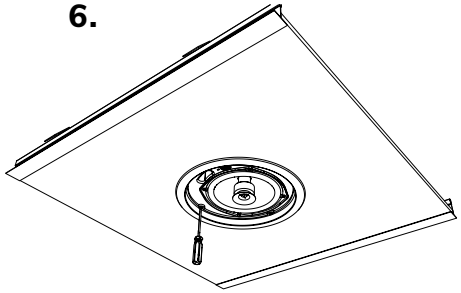

Carefully tighten the locking tabs using a suitable Philips screwdriver until they are tight. Do not overtighten

7.

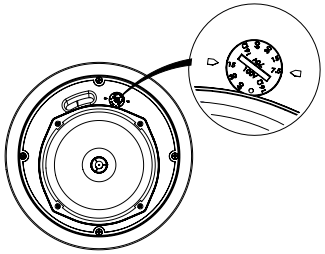

IMPORTANT! Ensure the correct transformer tap is selected

8.

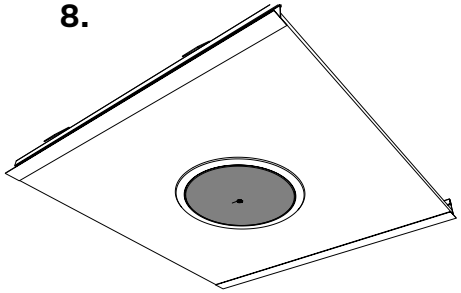

Check the speaker is secure. Once you have tested the system and satisfied yourself it is working correctly and the loudspeaker tapping is correct, fit the supplied loudspeaker grille.

RMS-ACOUSTICS
13720 24TH ST E
UNIT E110
SUMNER WA 98390
WWW.RMS-ACOUSTICS.COM

Detail drawings depict model iC6T loudspeakers; instructions are typical of all iC6, iC6T, iC8, iC8T loudspeakers.

Removing Rear Protective Cover Plate

To connect the cable to the loudspeaker terminals, follow this procedure.

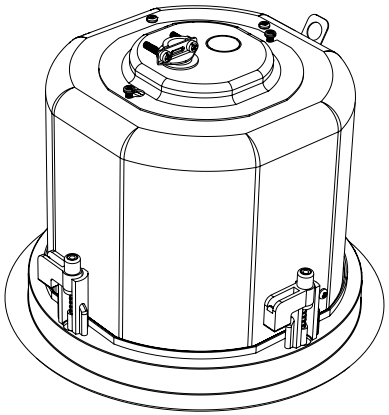

Undo the two screws that secure the protective plate on the top of the back can

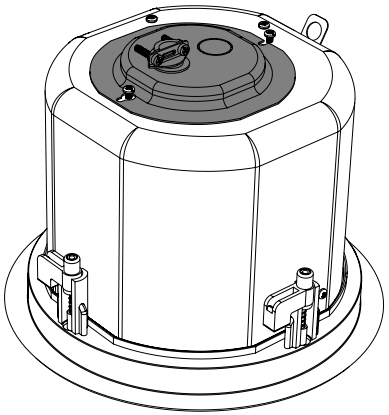

Slide the plate sideways and lift off

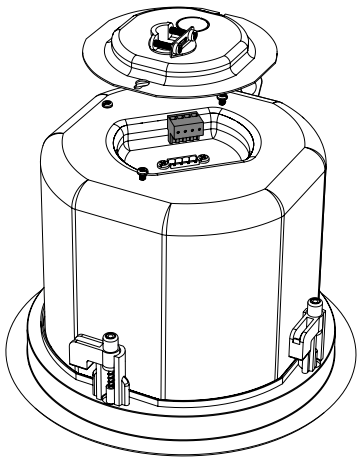

Pass the cable(s) through the cable grip Connect to the Euroblock terminals and terminate as shown in the following page "Terminating Wire Connections"

RMS-ACOUSTICS
13720 24TH ST E
UNIT E110
SUMNER WA 98390
WWW.RMS-ACOUSTICS.COM

Detail drawings depict model iC6T loudspeakers; instructions are typical of all iC6, iC6T, iC8, iC8T loudspeakers.

Terminating Wire Connections

Connect the included terminal block as follows:

Pin 1 : Positive In
Pin 3 : Negative In

Pin 2 : Positive link through
Pin 4 : Negative link through

Positive (+) and Negative (-) polarity is indicated by labeling on the included connector.

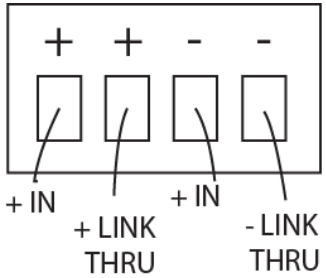

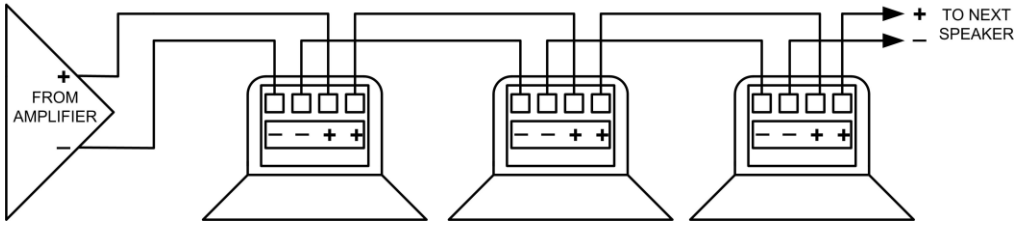

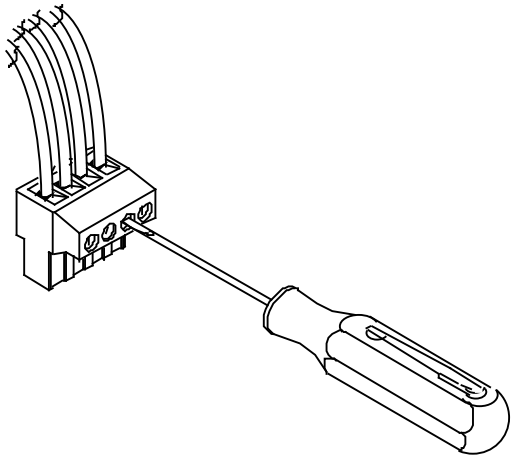

Connect the wire by stripping the insulation back about 5 mm (3/16 inch), such that the bare wire inserts to full depth without leaving any bare wire outside of the connector.

Insert the bare end of wire fully into the connector and screw down the terminal until tight using a small flat screwdriver. Tighten any unused screws to avoid rattling from vibration.

Reinstall the protective plate to the back can by the reverse procedure of Part 1

Important: When wiring loudspeaker cables be careful to observe the correct polarity of the cable and connector at both ends.

RMS-ACOUSTICS
13720 24TH ST E
UNIT E110
SUMNER WA 98390
WWW.RMS-ACOUSTICS.COM

Safety Cable

Location of safety cable attachment point

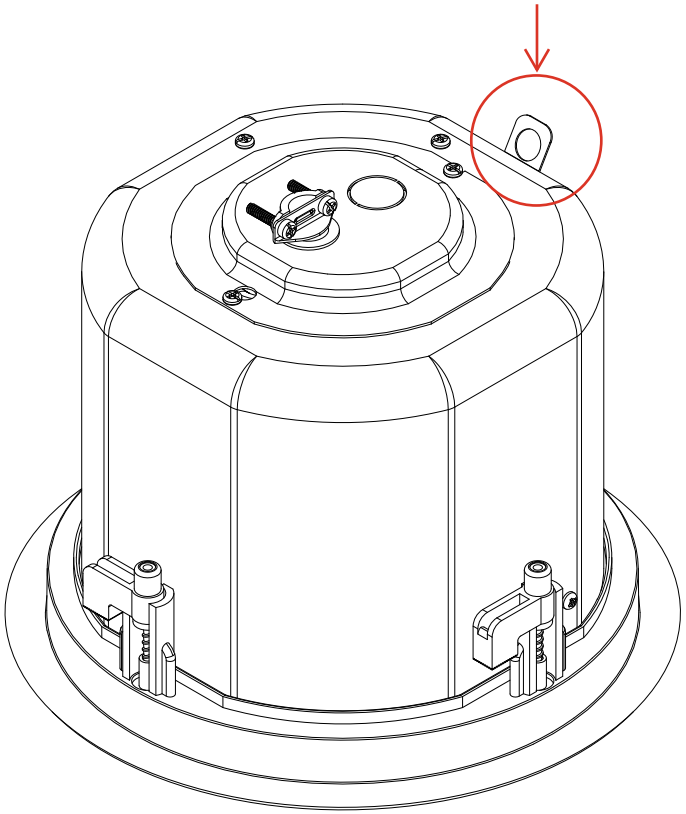

A tab is provided on the back of each speaker for connection to an independent secondary support point, which requires connecting a support line or "safety cable" to a secondary secure point on the building structure.

RMS-ACOUSTICS recommends always installing suitable safety cables, and **in some localities they are required.** Consult applicable construction codes in your region.

Safety cables must be a minimum 12 gauge Seismic or Aircraft cable, or as otherwise required by construction codes.

As safety cable requirements differ with local codes and the surrounding construction, **no secondary cable is included with the loudspeaker, and must be provided by the installer.**

For use in tiled ceilings all included brackets - Support Rails and C Ring - MUST be used. When tightening the mounting wings, align them with the C ring (and not with the gap in the C ring) so as not to clamp directly onto unbraced drywall or panel material.

For framed drywall ceilings, iC6-NCB new construction bracket must be used to provide support.

Do NOT install the loudspeaker without support brackets; ceiling materials can not support the weight of the speaker without them.

RMS-ACOUSTICS
13720 24TH ST E
UNIT E110
SUMNER WA 98390
WWW.RMS-ACOUSTICS.COM

Detail drawings depict model iC6T loudspeakers; instructions are typical of all iC6, iC6T, iC8, iC8T loudspeakers.

Painting Trim Ring

iC6 Loudspeakers feature a neutral white trim ring which integrates with most decor, but can be painted easily.

The ABS plastic trim ring accepts almost any oil and latex based paint.

Prepare the surface by cleaning with a dampened cloth. Do NOT use harsh solvents or abrasives, or the enclosure may be permanently damaged.

Insert the included clear plastic paint shield to mask the internals of the loudspeaker.

The speaker may be painted before installation, or after, along with the ceiling.

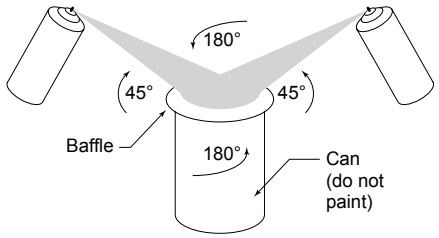

Painting Grille

iC6 Loudspeakers are provided with a sleek neutral white press-fit grille which integrates with the loudspeaker to provide a clean bezel-less appearance.

It is not recommended to brush or roll paint onto the grille as the small mesh openings and backing cloth can be clogged, resulting in degraded sound quality.

Paint the grille by spraying very lightly with thinned paint at a shallow angle crossing the mesh holes, being careful to avoid clogging the grille.

RMS-ACOUSTICS
13720 24TH ST E
UNIT E110
SUMNER WA 98390
WWW.RMS-ACOUSTICS.COM

WARNING!

DO NOT EXPOSE THIS EQUIPMENT TO RAIN OR MOISTURE

This symbol is intended to alert the user to the presence of important operating and maintenance (servicing) instructions in the literature accompanying the appliance.

CAUTION

RISK OF ELECTRIC SHOCK DO NOT OPEN

This symbol is intended to alert the user to the presence of uninsulated "dangerous voltage" within the product's enclosure that may be of **sufficient magnitude to constitute a risk** of electric shock to persons.

Important Safety Instructions

1. Read these instructions.
2. Keep these instructions.
3. Heed all warnings.
4. Follow all instructions.
5. Do not use this apparatus near water.
6. Clean only with a dry cloth.
7. Do not block any ventilation opening. Install in accordance with the manufacturer's instructions.
8. Do not install near any heat sources such as radiators, heat registers, stoves, or other apparatus (including amplifiers) that produce heat.
9. Protect the loudspeaker cable from being walked on or pinched particularly at plugs, convenience receptacles, and the point where they exit from the apparatus.
10. Do not unplug the unit by pulling on the loudspeaker cable, use the plug.
11. Refer all servicing to qualified service personnel. Servicing is required when the apparatus has been damaged in any way, such as liquid has been spilled or objects have fallen into the apparatus, the apparatus has been exposed to rain or moisture, does not operate normally, or has been dropped.
12. The apparatus shall not be exposed to dripping or splashing and no objects filled with liquids, such as vases, shall be placed on the apparatus.
13. Do not remove any covers, loosen any fixings or allow items to enter any aperture.
14. Ensure the loudspeaker is mounted with appropriately sized fixings of suitable load bearing capacity
15. Always ensure a secondary safety fixing is used where loudspeakers are mounted overhead.

RMS-ACOUSTICS
13720 24TH ST E
UNIT E110
SUMNER WA 98390
WWW.RMS-ACOUSTICS.COM